M1 Push-to-Close Latch

Lift-to-open · Flush

Mounting Cup

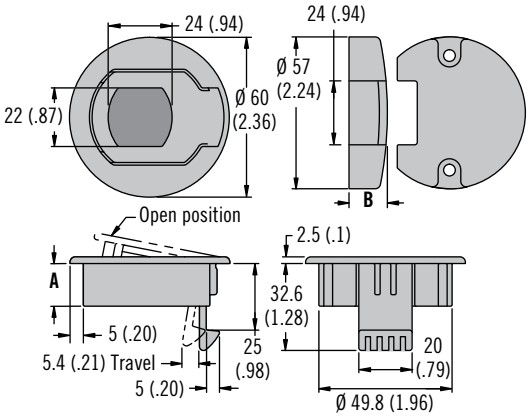

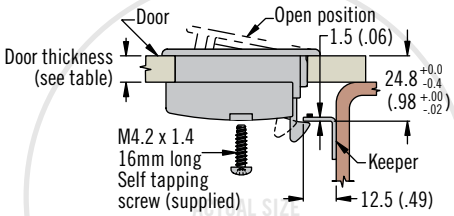

Door Thickness Range	A	B	Part Number
1 - 7 (.04 - .28)	16 (.63)	20.4 (.80)	M1-81
7 - 13 (.28 - .51)	16 (.63)	14.3 (.57)	M1-82
13 - 19 (.51) - .75)	22 (.87)	14.3 (.57)	M1-83

- **Low profile**
- **Non-corrosive and non-conductive**

Material and Finish

Latch: Acetal, black

Mounting hardware: Stainless steel

Other options available. For complete details on variety, part numbers, installation and specification, go to

INFO CLIC *www.southco.com/M1*

80 Push-to-Close Latch

Push-to-open · Snap-in

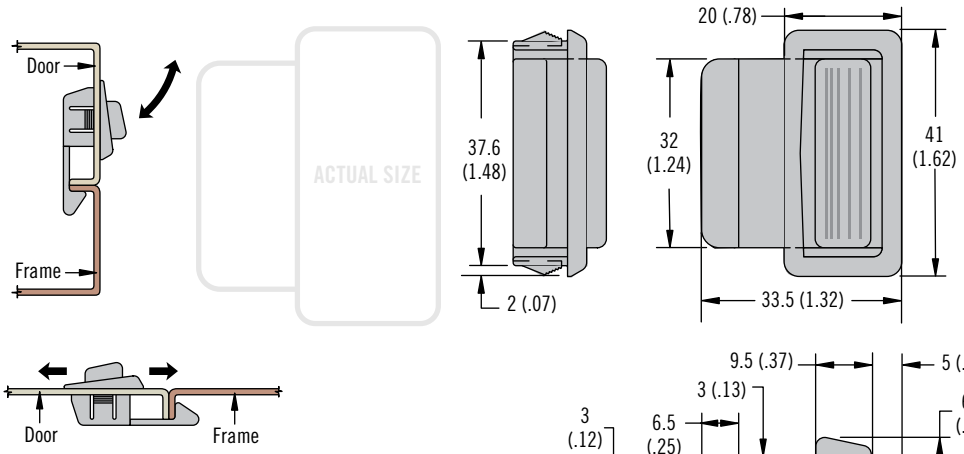

Color	Part Number
White	80-201
Black	80-202

Dimensions in millimeters (inch) unless otherwise stated

- **Snap-in installation**
- **Non-corrosive and non-conductive**
- **Suitable for sliding or hinged doors**

Material and Finish

Acetal, black or white

Other options available. For complete details on variety, part numbers, installation and specification, go to

INFO CLIC *www.southco.com/80*

southco®
CONNECT · CREATE · INNOVATE